The information contained in this drawing is the sole property of CWS Coil Winding Specialist.
Any reproduction in part or whole without written permission of CWS Coil Winding Specialist is prohibited.

REVISION HISTORY						
REV	ECN	DESCRIPTION	SIGN & DATE			
			BY	DATE	CHK	DATE
A		PRODUCTION RELEASE	TDK	2/08/04	JLAU	2/9/04

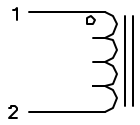

SCHEMATIC

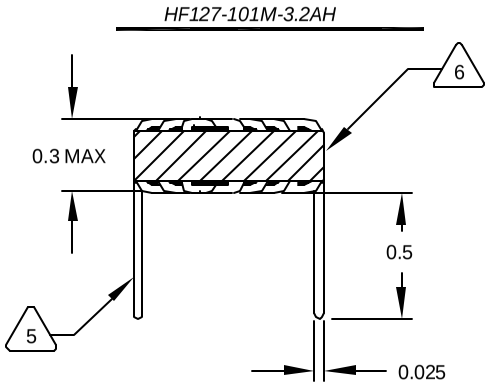

FRONT VIEW

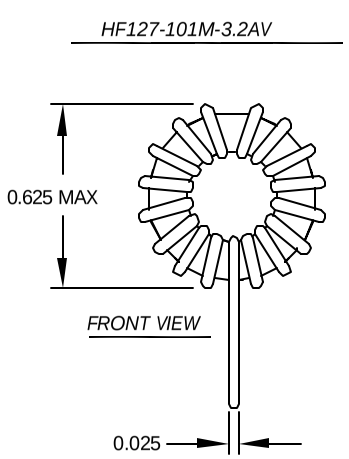

FRONT VIEW

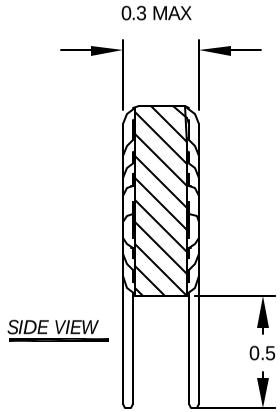

SIDE VIEW

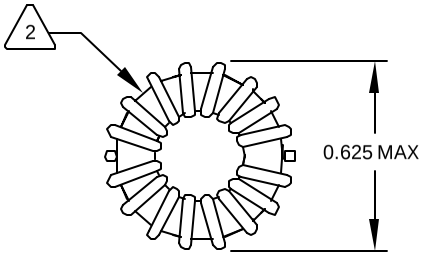

BOTTOM VIEW

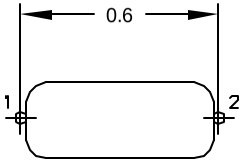

MOUNTING HOLES PATTERN

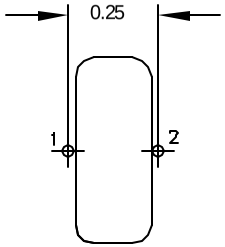

MOUNTING HOLES PATTERN

6 USING A PERMANENT MARKING METHOD
MARK PART NUMBER AND REVISION, IF APPLICABLE
IF NEEDED, WRAP INDUCTOR WITH GLASS TAPE

TO THE CORE
MUST REST FLAT ON PCB). LEADS MUST BE TANGENT
5 FLUSH WITH THE COIL EDGE, AS SHOWN (I.E. COIL
REMOVE INSULATION AND TIN LEADS 0.5 INCH

WIND COILS EVENLY SPACED AROUND THE CORE
4 CONSTRUCTION:

HI-POT TEST FOR WINDING TO CORE ISOLATION = 500VDC MIN
CURRENT RATING : 3.2 AMPS, 40 °C TEMP. RISE, NO AIR FLOW
DCR = 55.0 MILLI-OHMS MAX.
DC BIASED = 3.2 AMPS, INDUCTANCE = 59 UH
DC BIASED = 2.2 AMPS, INDUCTANCE = 80 UH
INDUCTANCE = 100 UH +-10% @ LOW DC BIAS, 1 KHz, 250mV
3 SPECIFICATIONS:

WIRE: UL RECOGNIZED 200°C RATED MAGNET WIRE
CWS BYTEMARK OR OTHER APPROVED PART
2 CORE: COATED HIGH FLUX TOROIDAL CORE

RATING CLASS B (130°C MIN.) REQUIRED
1 MATERIAL: UL RECOGNIZED 94V-0 FOR FLAMMABILITY

NOTES: TOROIDAL POWER CHOKE. ALL DIMENSIONS IN INCHES

	CODE IDENT	MFG. P/N	DESCRIPTION	ITEM NO.

PARTS LIST

AUTOCAD		X
SOLIDWORKS		
SIGN		DATE
DRAWN	TDK	2/8/04
CHECKED	JLAU	2/9/04
ENGR.	KSUN	3/5/04
APPR.	JLAU	3/8/04

UNLESS OTHERWISE SPECIFIED
DIMENSIONING AND TOLERANCE PER ANSI Y14.5M
ALL DIMENSIONS ARE IN INCHES AND [MILIMETERS].
TOLERANCE INCHES: .XXX=±.005 .XX=±.015 ∢=±0°30'
TOLERANCE METRICS: .XXX=±.127 .XX=±.38 ∢=±0°30'
ANGLE PROJECTION
DO NOT SCALE DRAWING

COILWS COM, INC
www.coilws.com

CWS Coil Winding Specialist.
1510 E. Edinger Ave.
Unit B, Santa Ana, CA. 92705

TITLE: Toroidal Power Chokes
Toroid Inductor

SIZE B | DWG. NO. HF127-101M-3.2A | REV B

SCALE 2=1 | SHEET 1 OF 1

EP FORM0005 REV 3 10/01

CAD-FILE: